Public Health
Environmental Health Services

http://www.sbcounty.gov/dehs

Retail Food Construction Guide

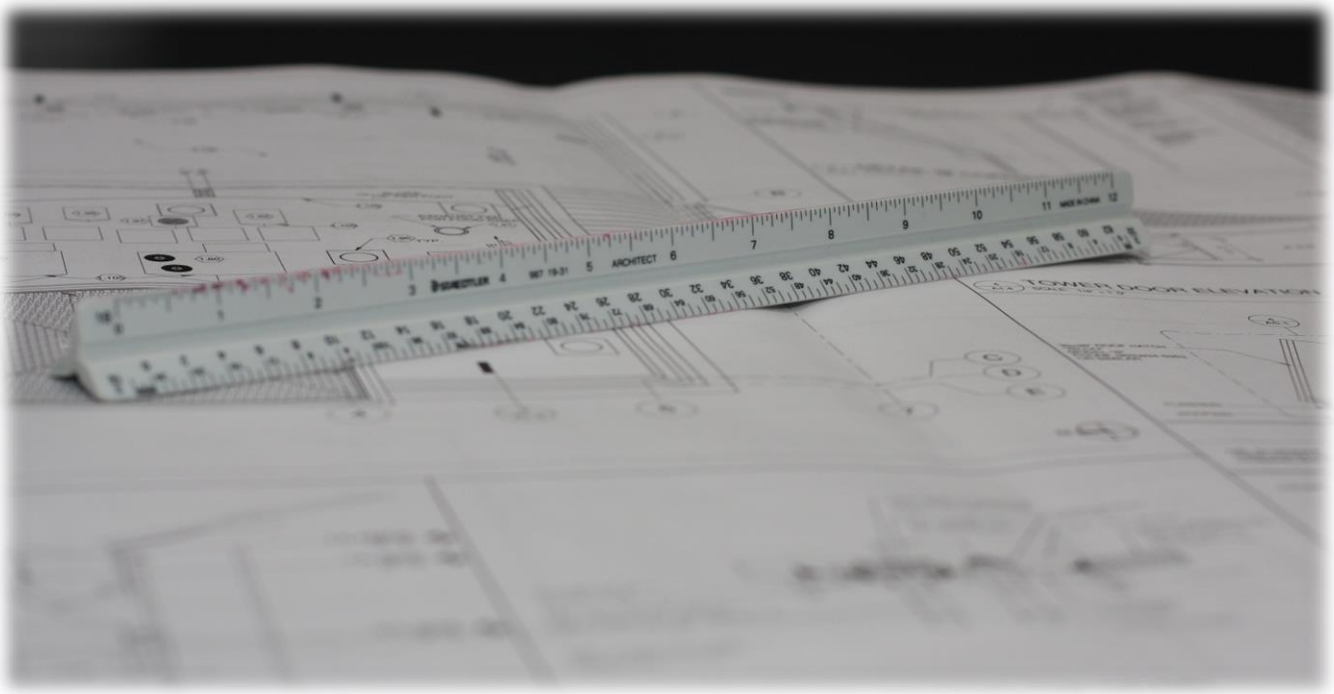

Guidelines for Constructing or Remodeling Permanent Food Facilities

San Bernardino County Public Health
Division of Environmental Health Services
385 N Arrowhead Ave., 2nd floor
San Bernardino, CA 92415-0160
1-800-442-2283
Fax: (909-387-4323

Revised August 2017

CONSTRUCTION GUIDE TO BUILD IT RIGHT

These guidelines are intended to assist the contactor, designer, or owner in the development of plans when constructing or remodeling a food facility in the County of San Bernardino. This guide has been developed from the California Retail Food Code, ANSI Standard 2: Food Service Equipment and guidelines published by the Southern California Food Technical Advisory Committee and the California Conference of Directors of Environmental Health. See our website for other handouts.

(800) 442-2283

www.sbcounty.gov/dph/dehs

Fax (909) 387-4323

RANCHO CUCAMONGA
8575 Haven Ave, Suite 130

SAN BERNARDINO
385 N Arrowhead Ave, 2nd Floor

HESPERIA
15900 Smoke Tree St, Suite 131

Revised August 2017

TABLE OF CONTENTS

Page Number

Plan Submission and Review Process 1

Information Required For Plan Submittal 2

Field Construction Inspections 3

GENERAL CONSTRUCTION AND EQUIPMENT REQUIREMENTS

1. Floors 4
2. Walls and Ceilings 5
3. Walls 5
4. Ceilings 6
5. Exhaust Hoods and Ducts 6
6. Refrigeration 7
7. Ice Machines 8
8. Floor Sinks 8
9. Warewashing Sinks 9
10. Food/Vegetable Preparation Sinks 10
11. Automatic Warewashers 10
12. Garbage Disposals 11
13. Janitorial Sink and Supplies 11
14. Handwashing Sinks 11
15. Dipper Well 12
16. Window Screens 12
17. Food Shields (Sneeze guards) 12
18. Dry Food and Beverage Storage 12
19. Restrooms 14
20. Dressing Rooms / Areas 14
21. Pass-through Windows 15
22. Delivery Doors 15

23. Entrance Doors 15

24. Garbage and Trash Areas 16

25. Lighting 16

26. Ventilation 16

27. Equipment and Installation 17

28. Plumbing/Water Heater 18

29. Sewage Disposal/Grease Interceptors 18

Appendix

Appendix 1: Sample Floor Plan 19

Appendix 2: Sample Equipment Schedule 20

Appendix 3: Sample Finish Schedule 21

Appendix 4: Guidelines for Sizing Hot Water Heaters 22

Appendix 5: Mobile Food Facility Commissary Requirements 23

PLAN SUBMISSION AND REVIEW PROCESS

Pursuant to the California Retail Food Code, Section 114380, plan approval must be obtained from the County of San Bernardino, Department of Public Health, Division of Environmental Health Services (DEHS) before constructing, altering, converting or remodeling any building used as a food facility. ("Remodel" means construction, building, or repair to the food facility that requires a permit from the local building authority). The following is required to process and obtain approval to build or remodel a food facility.

PLAN SUBMISSION

1. Submit three (3) sets of detailed plans and specifications, complete an application for Food Service Plan Review and pay the required plan check fees.

   Or

   A set of digital plans in Adobe PDF format may be submitted via CD, flash drive or email to EHSPlanReview@gmail.com. An application and plan check fees must submitted in person or via mail. Visit our website for improvement updates.

2. The plans must include sufficient information to demonstrate compliance with the California Retail Food Code in order to be approved.

3. Plans may be prepared by an architect, draftsperson, consultant, contractor or owner. All plans must be drawn to a minimum scale of 1/4" per foot in a professional manner encompassing all applicable requirements of this construction guide.

4. Plans will be approved or rejected within twenty (20) working days after receipt and the applicant will be notified. Rejected plans (plans that are incomplete, or require significant change) will have two (2) sets returned for revision. Three (3) complete sets must again be submitted for review or one (1) electronic set before approval will be granted; no additional fee is required.

5. Upon approval, two (2) sets of plans one (1) electronic set will be returned to the applicant, and the third (3rd) set will be kept on file until construction has been completed. An approved set of plans must be maintained at the construction site until the final inspection is conducted.

6. Any changes to DEHS approved plans require additional review and approval. Application and fee may apply.

7. Before beginning construction, a building permit must be obtained from the appropriate Department of Building and Safety (By law, building permits for food facilities are not to be issued until plan approval has been obtained from DEHS).

NOTE: An approved plan is valid for two (2) years (five [5] years for schools and institutions). After such time, the plan is VOID.

INFORMATION REQUIRED FOR PLAN SUBMITTAL

The plans shall show and specify in detail the following on the plan and/or accompanying paperwork:

Provide the exact name and address of the food facility, the name, telephone number and email address of the owner, contractor and contact person.

Plans shall be drawn to scale, e.g., minimum 1/4" = 1 foot using indelible ink or print (no pencil), and shall include:

- A site plan showing the proposed location of a separate impervious area for garbage cans/bins, with approved drainage. The site plan should also show the spatial relationship between the food facility and any adjacent buildings.

- Floor plan of entire food facility, including but not limited to food preparation and storage areas, warewashing area, walk-in coolers, janitorial areas, toilets, dressing room, break rooms, storage, garbage and trash areas, etc., including all interior and exterior doors. Location of the manager's or chef's office, if present, must be shown. Spaces such as employee dressing rooms or food storage areas cannot be used for office space. Include the total square footage of the facility.

- Complete equipment layout and equipment schedule, listing type, make and model numbers of all equipment. Elevations of equipment layout are recommended.

- Complete plumbing layout showing water lines, hot water heater, sewer lines, floor drains, floor sinks, vents, cleanouts, grease interceptor, grease trap, etc.

- Electrical layout including lighting. Location of electrical panel(s) must be shown.

- Complete finish schedule for the floors, cove base, walls, and ceilings that indicates the type of material, color, and the surface finish. Samples may be required.

- Complete Commercial Hood/Mechanical Exhaust Data Sheet for each exhaust hood. Indicate type of exhaust hood, calculations, etc. Provide hood and make-up air elevations with specifications including duct construction and clearances. If the hood is a listed hood, submit the manufacturers specifications (manufactured and tested i.e. by UL or ETL),

- Complete menu information including if alcoholic beverages are to be served.

NOTES:

If project is a remodel of an existing food facility, clearly indicate the extent and square footage of the remodel. Include a layout of the existing facility, as is prior to the remodel.

State on the plans whether the food facility is served by a Public Water System or individual water well.

- If water wells are to be the source of potable water, contact Environmental Health Services, Water/Waste Water Program for water supply permit requirements at (800) 442-2283.

State on the plans whether the food facility is served by a sewer district or by an on-site sewage disposal system.

- If an on-site sewage disposal system is to be installed, approval must be obtained from Environmental Health Services, Water/Waste Water Program at (800) 442-2283.
- If an onsite sewage disposal system is existing, a completed septic certification form signed by an A, B, or C -42 contractor is required.

FIELD CONSTRUCTION INSPECTIONS

Request for inspections should be made at least 3-5 business days in advance. Contact DEHS to schedule an inspection. The construction of the food facility must conform to the latest set of DEHS approved plans.

WHEN TO CALL FOR INSPECTION:

✓ **PRELIMINARY (FINISHES)**

After finished surface materials have been installed (i.e. floors, cove base, walls and ceiling) with plumbing, rough ventilation, and prior to equipment installation.

✓ **CONSTRUCTION (EQUIPMENT)**

Upon installation of 80-100% of all equipment, and any corrections listed on the Preliminary Inspection Report.

✓ **FINAL**

Upon completion of all construction, including all previous corrections; permanent utilities (electric, gas, potable water, sewage disposal) must be provided at time of final inspection. Hot water of at least 120°F must be provided at the mop sink, and minimum of 100°F at utensil sink and at all handwash sinks. All equipment must be operational (refrigeration must be at proper temperature of 41°F or below with a thermometer present).

When more than three (3) inspections are necessary to approve the facility to operate, additional fees may apply.

The owner/operator will receive an application for an annual Environmental Health Permit at the time of the equipment construction inspection. This application along with applicable permit fees, are due at the time of final inspection.

Final construction must be approved by DEHS prior to the issuance of a health permit and the opening of a new food facility or the use of remodeled areas.

Food should not be stocked or prepared until specific authorization is given by DEHS.

GENERAL CONSTRUCTION AND EQUIPMENT REQUIREMENTS

1. FLOORS

Floor surfaces in all areas where food is prepared, prepackaged, or stored, where any utensil is washed, where refuse or garbage is stored, where janitorial facilities are located, and in all toilet and handwashing areas, shall be smooth and of durable construction and nonabsorbent material that is easily cleanable. Floors shall be an approved type that continues up the wall or toe-kicks on counters, at least four (4) inches, in a seamless manner, forming a 3/8 inch minimum radius cove as an integral unit. Vinyl/rubber top set base is acceptable in very limited circumstances.

a. Quarry tile, ceramic tile, commercially approved sheet vinyl (with a minimal wear layer thickness of 0.055 inch) or a commercially-applied seamless troweled epoxy floor is acceptable.

b. Concrete floors are to be sealed with a seamless troweled epoxy floor system, or a USDA approved penetrating sealer, which is nonabsorbent, grease and acid resistant. Non-approved sealers (like Polyurethane) and epoxy paints (i.e. any form of garage floor paints available at Home Stores) are not acceptable.

c. Floors that are water-flushed for cleaning have additional requirements; contact DEHS for details.

d. Flooring under equipment shall be completely smooth. Floor surfaces which contain slip resistant agents shall be restricted to traffic areas only.

e. The requirements of this section do not apply to floor surfaces in customer sales, dining and serving areas, except for dining and serving areas where there is a permanent/semi-permanent unpackaged food service/sales operation, e.g., salad bars, buffets, beverage bars, etc.

f. At customer self-service food and beverage counters, approved flooring shall be provided around all open sides of the counter for a distance of at least three feet. This flooring shall extend up counter toe-kicks at least four (4) inches with an integral cove.

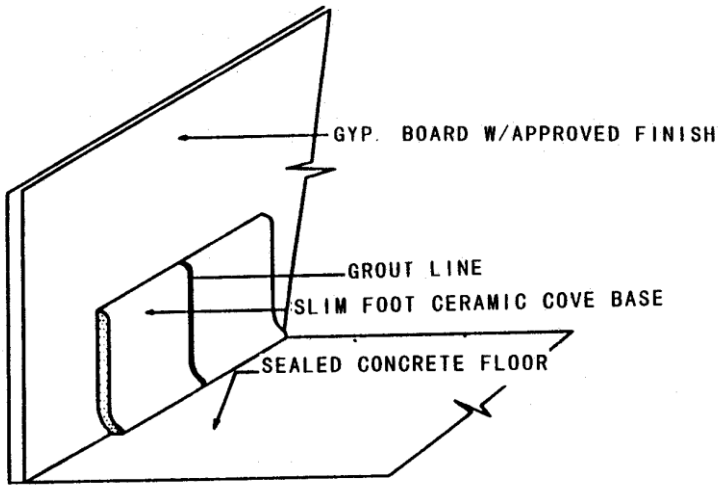

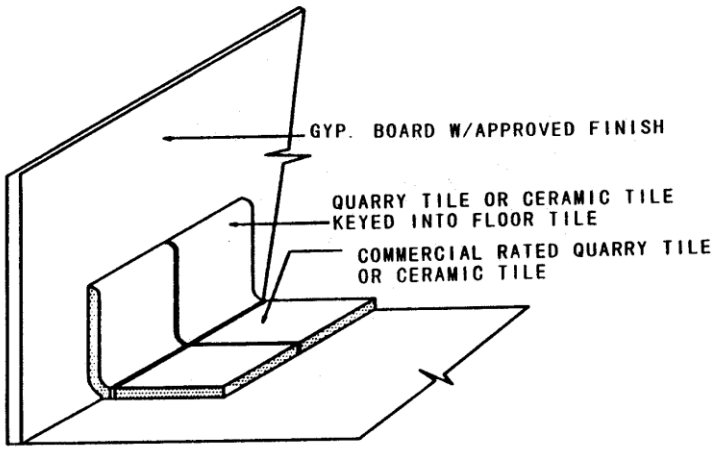

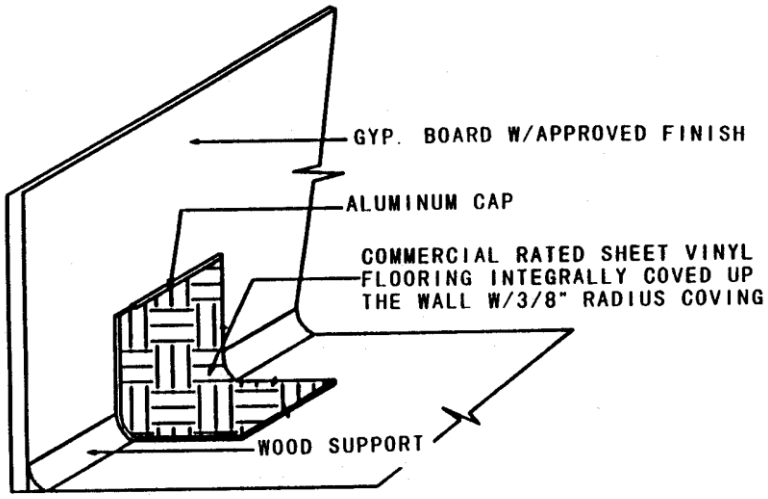

2. WALLS AND CEILINGS

The walls and ceilings of all rooms shall be of a durable, smooth, nonabsorbent and washable surface (e.g. gloss or semi-gloss enamel paint, epoxy paint, FRP, stainless steel, ceramic tile or other approved materials and finishes).

a. Brick, concrete block, rough concrete, rough plaster, grooved paneling, wood, or wall paper are not acceptable.

b. Waitress stations, salad bars, buffet tables, ice machines, food serving or self-service open food and drink counters, and other similar areas located immediately adjacent to or in dining areas, must comply with floor, wall and ceiling requirements.

3. WALLS

Wall surface materials are subject to evaluation and may require submission of samples.

All wall surfaces shall be covered with a gloss or semi-gloss enamel, epoxy, fiberglass reinforced polyester panels (FRP), ceramic tile or other approved materials.

a. Due to the high moisture present, walls behind all utensil washing sinks, janitorial sinks, food preparation sinks, hand wash sinks, and the area surrounding automatic warewashers (dish-machines) and accompanying drain-boards shall be finished with a wainscot of fiberglass reinforced polyester (FRP), stainless steel, ceramic tile, or equivalent. The approved wall finish material shall extend from the top of the coved base to a height of at least four (4) feet except behind warewashing machines where the wainscot must extend to eight (8) feet from the finished floor. All wainscoting must extend at least 18 inches to the sides of sinks and warewashers.

b. In restrooms, an approved wainscot shall extend from the top of the coved base to a height of at least four (4) feet on all restroom walls.

c. Laminate or fiberboards is unacceptable.

d. The wall surfaces behind and within eighteen (18) inches of any cooking equipment and other high temperature generating equipment must be stainless steel or equivalent. The local building and fire authorities will normally determine the acceptability of wall surfaces in areas subject to flammability.

e. Walk-in coolers and freezers, exhaust hoods, and some large bakery equipment must be flashed to the ceiling with an approved washable material to close off an area that otherwise is not easily accessible for cleaning.

4. CEILINGS

Samples of proposed ceiling finish materials, other than smooth plaster, putty coat plaster, or drywall with sealed and taped joints, must be submitted for evaluation prior to installation.

a. Acoustical paneling may be utilized providing it is installed not less than 1.8 meters (6 feet) above the floor. An approved list of acoustic ceiling panels is available.

b. Blown acoustical-type ceiling is not acceptable.

5. EXHAUST HOODS AND DUCTS

Mechanical exhaust ventilation shall be required at or above all ranges, griddles, ovens, deep fat fryers, barbecues, rotisseries and high temperature dishwashing machines or similar equipment to effectively remove grease, smoke, steam, vapors, heat or odors.

All hoods, ducts, and exhaust outlets shall be designed and installed in accordance with the Uniform Mechanical Code or if UL listed, to UL 710 Standards. UL listed hoods shall meet all manufacturer specifications. Such specifications must be detailed on the plan.

NOTE: Exemptions to this section may be granted when equipment has been formally submitted to DEHS for a mechanical exhaust exemption. Part of this exemption process is the verification that the equipment meets UL 710 standards and is in compliance with EPA test method 202.

a. A Type I Hood is a kitchen hood for collecting and removing grease and smoke. Type I hoods shall be equipped with approved grease filters or grease extractors designed for that specific purpose.

b. A Type II Hood is a general kitchen hood for collecting and removing steam, vapors, heat or odors.

c. All joints and seams shall be sealed or welded for ease of cleaning. Riveted seams are not acceptable.

d. Canopy Type Hoods shall not be more than four (4) feet above the cooking surface. The hood shall overhang or extend a horizontal distance not less than six (6) inches beyond the outer edges of the cooking surfaces, on all open sides. It shall have grease troughs or drip pans that are easily cleanable.

e. Non-canopy Type (High Velocity) or Back Shelf Hoods can be approved providing they are constructed to be easily cleanable and comply with minimum exhaust air velocity requirements. (refer to California Mechanical Code). Shielding at the ends of the hood may be necessary to prevent interference from cross drafts.

f. Make-up Air shall be provided equal to that amount which is mechanically exhausted, and shall be electrically interconnected on a single switch. Windows and doors shall not be used for the purpose of

providing make-up air. Make up air for UL listed hoods shall be equal to that specified by the manufacturer.

g. Food heating or warming devices (i.e., cheese melters) that are installed above other equipment yet beneath an exhaust hood may create an air flow obstruction. The design, construction and installation of such warming devices under a hood are thereby subject to evaluation and approval by this DEHS prior to installation

h. Fire Suppression Systems may be required by local fire department codes. They shall be installed so as to allow ease of cleaning in the hood and duct systems.

i. A certified Air Balance Test may be required by DEHS in order to demonstrate that the exhaust hood and make-up air system is operating to design specifications.

6. REFRIGERATION

All refrigeration units shall be adequate in capacity to the needs of the proposed operation and shall comply with the following requirements:

a. Equipment must be specifically constructed for commercial use, ANSI Certified for sanitation (NSF, ITS, ETL, EPH, UL Sanitation or CSA). Domestic household model refrigeration units will not be accepted.

b. Merchandiser units (usually display refrigerators with glass doors) are not approved for open foods, and are not permitted in food prep areas.

c. An accurate, readily visible thermometer located to indicate the air temperature in the warmest part of the unit (usually by the door) must be provided.

d. Shelving must be nonabsorbent and easily cleanable. (Wood is not acceptable.) Use only shelving as provided by the manufacturer to facilitate air circulation.

e. Equipment surfaces must be smooth, nonabsorbent and easily cleanable. All joints must be sealed.

f. Condensate waste from refrigeration units must drain to a floor sink via an air gap (refer to Section 8). If designed by the manufacturer, condensate may drain to a properly functioning evaporator. Rapid cool down equipment may be required depending on the food operation.

g. Floor sinks, floor drains and trench drains are not allowed to be located inside the walk-in. Trench drains can be allowed immediately outside of a walk-in cooler door.

h. All refrigeration units shall be located within the food facility. Outdoor refrigeration units are not acceptable unless they open directly into the food facility.

i. A walk-in cooler may be required if the proposed menu suggests that a moderate amount of foods will be cooked ahead of use requiring cooling.

WALK-IN REFRIGERATION UNITS SHALL ALSO:

a. Have an integral coved base with a radius of at least 3/8 inch at the floor/wall juncture both inside and outside of the cooler; the floor material shall extend up to a height of at least four (4) inches on the walls. Four (4) inch approved metal top set coving with a minimum 3/8 inch radius is acceptable against metal wall surfaces. (Wood is not an acceptable interior finish.)

b. Have shelving that is at least six (6) inches off the floor with smooth, round, metal legs or cantilevered, suspended directly from the wall, for ease of cleaning. Wood shelving is not acceptable. Shelving shall be noncorrosive and designed to allow for optimum flow of refrigerated air. Small, easily movable, castered dollies may be used in place of a lower shelf.

c. Have condensate waste drain to a floor sink via an air gap (by gravity flow, refer to Section 8). The floor sink must be located outside the walk-in refrigeration unit and within the building.

7. ICE MACHINES

All ice machines shall be located inside the food facility in an easily cleanable, well-ventilated area, and shall be drained to a floor sink via an air gap (refer to Section 8).

a. Where jockey boxes are used, they must include an integral cold-plate such that pressurized lines do not pass through customer ice.

8. FLOOR SINKS

All condensate and other liquid waste from equipment must indirectly drain (via gravity flow) to a properly plumbed floor sink.

a. Floor sinks shall be installed flush with the finished floor surface and have strainers and proper grates.

b. Horizontal runs of drain lines shall be secured at least 1/2 inch from the wall and six (6) inches off the floor with a 1/4" per foot slope until terminating at least twice the pipe diameter (minimum of one inch) above the overflow rim of the floor sink.

c. Floor sinks shall be located so that they are readily accessible for inspection and cleaning (min half exposed).

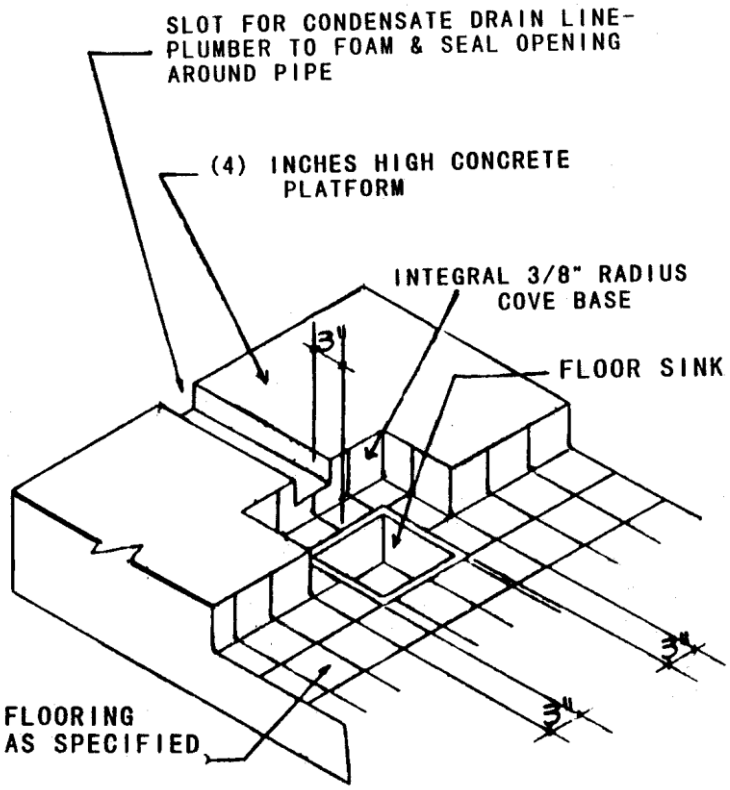

HALF EXPOSED FLOOR SINK BELOW
CURB MOUNTED EQUIP.

d. Waste lines shall not cross any aisle, traffic area or doorway.

e. Floor sinks must be located inside of the building.

f. Floor sinks shall be located within 15 feet of the condensate producing equipment. If proper slope cannot be maintained then the distance must be reduced to compensate.

9. WAREWASHING SINK

Where open foods are prepared/served, there shall be provided a three-compartment stainless steel sink with dual integral installed stainless steel drainboards that drains to a floor sink via an air gap (refer to Section 8). Food preparation includes beverage dispensing, making and bagging of ice, and dispensing of open candy, beef jerky and similar snacks. A warewashing sink is not required if the facility is 100% prepackaged.

a. The minimum compartment size shall be at least 18"x 18" x 12" deep with minimum 18" x 18" drainboards, or 16" x 20" x 12" deep with minimum 16" x 20" drainboard. However, the sink must otherwise be capable of accommodating the largest utensil to be washed and the drainboards shall be as large as the largest sink compartment.

b. Bar sinks shall have a minimum compartment size of 10" x 14" x 10" deep (or a minimum of 140 square inches in surface size), with dual integral drainboards, a minimum of 18" long. Bar sinks shall have a quick drain or a fourth sink compartment for disposal of drink/ice waste. Bar sinks shall drain to a floor sink via an air gap (refer to Section 8).

c. The warewashing sink shall be ANSI Certified for sanitation (NSF, ITS, ETL, EPH, UL Sanitation or CSA).

d. When a sink is installed next to a wall, a metal "backsplash" extending up the wall at least eight (8) inches shall be formed as an integral part of the sink, and sealed to the wall.

e. In large food facilities which may contain separate sections or departments, additional three-compartment sinks may be required for cleanup procedures in delis, meat processing areas, fish processing areas, bakeries, sushi bars, etc.

f. Cleaned in place equipment shall be adjacent to an approved floor or trench drain and hose down station with proper back flow prevention.

g. Sanitizing agents shall be provided with the appropriate testing indicators, i.e., color test strips.

10. FOOD/VEGETABLES PREPARATION SINKS

Food facilities utilizing a sink for food preparation, such as thawing of meats or seafood or, the washing of vegetables, etc., shall have at least a one (1) one-compartment food/vegetable preparation sink, separate from utensil washing sinks, that indirectly drains to a floor sink via an air gap (refer to Section 8). An integral drainboard or adjacent table at least 18 inches by 18 inches in length and width is required.

a. The prep sink shall be ANSI Certified for sanitation (NSF, ITS, ETL, EPH, UL Sanitation or CSA)

11. AUTOMATIC WAREWASHERS

All automatic warewashers (dishwashers and glass washers) must be commercial units that are certified for sanitation by an ANSI accredited certification program and must drain to a floor sink or other approved method via an air gap (refer to Section 8).

The presence of an automatic warewasher does not eliminate the need for a three compartment, stainless steel sink with dual integral drainboards.

a. All spray-type warewashers and glass washers which are designed for a hot water sanitizing shall be provided with a booster heater that meets or is equivalent to approved applicable sanitation standards by being cycled through equipment that is used in accordance with the manufacturer's specifications and achieving a utensil surface temperature of 160°F as measured by an irreversible registering temperature indicator. These warewashers require an approved (Type II) exhaust hood.

b. Warewashing machines are to be provided with a pre-rinse unit. The pre-rinse for an under counter warewasher may be accomplished by providing a combination faucet/sprayer at the 3-compartment warewashing sink.

c. Warewashing machines, including under counter warewash machines, must have two (2) integral stainless steel drainboards of adequate size and construction. One (1) drainboard shall be for soiled equipment and utensils and one (1) drainboard shall be for clean equipment and utensils. Drainboards of a manual warewashing sink may satisfy this requirement if the sink is located adjacent to the warewashing machine. Drainboards, utensil racks, or tables must be large enough to accommodate all soiled and cleaned items that can accumulate during operating hours. Sinks and drainboards must be sloped and drain into an approved liquid waste receptor.

d. A warewashing machine shall be provided with an easily accessible and readable data plate affixed to the machine by the manufacturer.

e. Sanitizing agents shall be provided with the appropriate testing methods, i.e., color test strips.

12. GARBAGE DISPOSALS

A garbage disposal cone or pre-rinse scrap sink may be installed in a drainboard if the required drainboard is lengthened to accommodate the cone or sink.

a. For automatic warewashing machine drainboards, a scrap sink or large disposal cone which is approximately the size of a dish rack may be built into the required drainboard if a dish rack can be properly placed over it. In this case, the space occupied by the sink or cone may be considered as part of the required drainboard space.

b. A garbage disposal may not be installed in any sink compartment which is required for washing, rinsing, or sanitizing equipment or utensils, or the preparation of food. In order to install a garbage disposal in a sink compartment, an additional compartment is required. For example, a three-compartment sink used for washing, rinsing, and sanitizing utensils would require a fourth compartment for the installation of the garbage disposal.

13. JANITORIAL (MOP) SINK AND SUPPLIES

A one-compartment, wall-mounted janitorial sink or a floor mounted janitorial sink (recommended), or a curbed area, (properly sloped to a drain), that has hot and cold running water through a mixing faucet, with an approved backflow-prevention device, shall be installed for general cleanup activities.

a. All curbed-area surfaces shall be smooth, impervious and of easily cleanable construction. Where duckboards or floor mats are used in the food facility, a curbed area with a drain is required for cleaning.

b. A janitorial sink shall be located within the building, in a separate janitorial room or separated from the rest of the food facility by a solid-wall partition. The partition must be a minimum six (6) foot high, durable, smooth and an easily cleanable surface.

c. If located in a food prep or warewashing area, the janitorial sink must be floor mounted.

d. A cleanable storage rack or shelving is required for the separate storage of chemicals.

e. All poisonous or toxic substances, detergents, bleaches, and cleaning compounds, shall be stored and used only in a manner that is not likely to cause contamination or adulteration of food, food contact surfaces, utensils, or packaging materials

f. Provide a mop rack in the janitorial area.

14. HANDWASHING SINKS

Hand sinks shall be provided in the food preparation and warewashing areas that are sufficient in number and conveniently located so as to be accessible at all times for use by food handlers. Hot and cold water through a premixing faucet is required.

a. Handwashing facilities shall be equipped to provide warm water (100 degrees F) under pressure for a minimum of 15 seconds through a mixing valve or combination faucet.

b. A hand sink shall be provided with the following in dispensers at, or adjacent to, each handwashing facility:

- Handwashing cleanser
- Sanitary single-use towels or a heated-air hand drying device

c. A separate, approved hand sink must be conveniently located in each area of a food facility which handles unpackaged food (i.e., deli, meat, fish, produce, bakery, bars, sushi bars, oyster bars, etc.) and in warewashing areas that are not located within or immediately adjacent to a food preparation area.

d. Handwash sinks in larger kitchens, as a general rule, shall be located within 25 feet of any work station.

15. DIPPER WELL

A running water dipper well may be provided if scoops or other reusable serving utensils are used for dipping ice cream, butter, etc.

a. The dipper well shall indirectly drain to a floor sink via an air gap (refer to Section 8).

16. WINDOW SCREENS

All openable windows, such as restroom windows, shall be screened with not less than 16 mesh screening.

17. FOOD SHIELDS (Sneeze guards)

The purpose of a food shield is to eliminate potential contamination from customers and to protect food and beverages that are prepared in proximity to customers.

a. The food shield shall be designed and installed to intercept a direct line between the customer's mouth (between 54 and 60 inches above the floor) and the food or utensils being displayed. This requirement includes the ends of service lines where displayed food or utensils are within the zone of potential droplet contamination.

b. Food shields must comply with the construction, materials, finishes, and formula requirements established by ANSI Standard 2, section 5.35

c. Plates and utensils shall be located under the food shield for protection.

d. Approved self-service containers which are not located under a food shield shall have tight-fitting, securely attached, self-closing lids.

18. DRY FOOD AND BEVERAGE STORAGE

Adequate and suitable floor space shall be provided within the enclosed walls of the building for the storage of food, beverages, paper goods, cleaning materials and related products.

a. The floor space required for backup dry food storage shall be a minimum of 100 square feet or 25% of the food preparation area (whichever is greater).

b. A minimum of 32 linear feet of 3 to 4 tier shelving units are required for general dry storage. Dry storage requirement is counted as footprint of dry storage rack. For example, one (1) five (5) foot long dry storage rack with 4 tiers counts as five (5) linear feet of dry storage shelving. This does not include refrigeration storage or working storage such as over and under counter cabinet/shelves.

c. Additional storage may be required for those food facilities with preparation areas totaling more than 400 square feet, or which have more than 100 seats,

d. Specialty foods facilities with limited menus (as determined by DEHS) may provide a minimum of 24 linear feet of approved shelving units.

e. Shelving units shall be a minimum of 18 inches in depth and at least three (3) tiers high.

f. Working storage (cabinets over and under food handling equipment and wall mounted shelves which are located in and used in conjunction with food preparation areas) shall not be used in calculating dry food back up storage.

g. Dry food and beverage shelving shall be impervious, smooth and easily cleanable; Shelving units must be ANSI Certified (NSF, UL, or ITS). Wood shelving is NOT approved. The lowest shelf shall be at least six (6) inches above the floor, with a clear, unobstructed area below.

h. Electrical panels, large fire prevention system components or similar wall-mounted equipment must be drawn on the plans. (Provisions must be made to compensate for the space required for such installations).

i. Each department in a grocery store which handles unpackaged foods, i.e., deli, meat, fish, bakery, etc., and satellite food service facilities in restaurants, i.e., sushi bars, oyster bars, etc., must provide its own dry food storage space based upon the minimum requirements contained in this section. This is in addition to general dry storage.

j. Within bars/taverns, a separate room or area with at least 50 square feet of floor space shall be dedicated for backup beverage and bar supply storage. At least 16 linear feet of approved shelving units shall be installed in the 50 square feet of dedicated floor space. However, depending on the size and type of operation, additional shelving may be required. When a bar is located within a restaurant, the storage requirement for the bar must be provided in addition to the required general dry food storage.

k. Within produce departments of grocery stores or produce stores (produce only), a separate room or area with at least 50 square feet of floor space shall be dedicated for storage of food and packaging supplies. In most cases, at least 16 linear feet of approved shelving units shall be installed.

l. Prepackaged food facilities shall provide a separate room or area of at least 50 square feet of floor space dedicated to dry food and beverage backup storage. At least 16 linear feet of approved shelving units shall be installed.

m. If shelves are supported by legs on the floor, the legs shall be smooth, round, metal equipment legs.

n. Adequate and suitable space shall be provided for storage of clean and dirty linens.

19. RESTROOMS

Toilet facilities shall be provided within each food facility, convenient for the employees. (Check with local Building and Safety departments for special circumstances, such as the American Disability Act.)

a. Toilet facilities are required within each food facility for use by the employees.

b. Customer toilet facilities shall be so situated that patrons do not pass through food preparation, food storage or utensil washing areas when they are allowed access to the toilet facilities.

c. The floors, walls and ceilings shall have surfaces that are smooth, nonabsorbent and easily cleanable. A four-foot-high wainscot of a durable impervious material shall be installed above the 4-inch coving on all restroom walls.

d. Fiberglass reinforced polyester paneling (FRP), ceramic tile, or stainless steel may be used as a wainscot. Submit samples of alternate materials for evaluation and approval prior to installation.

e. Handwashing sinks shall be provided within or immediately adjacent to the toilet rooms. The sink shall provide water of at least 100° Fahrenheit through a mixing valve or combination faucet. Soap and sanitary towels in single-service dispensers shall be provided at the handwashing sink. Heated-air hand drying devices may be used in lieu of sanitary towels.

f. Hot water must reach the handsink within ten seconds. For handwashing facilities which are located at a distance from the hot water heater, additional means of providing hot water to the handsinks may be required such as a recirculating pump.

g. Toilet tissue shall be provided in a permanently installed dispenser at each toilet.

h. The restrooms shall be provided with tight-fitting, self-closing doors.

i. All toilet rooms shall be provided with ventilation. If adequate ventilation cannot be provided by an openable, screened window, mechanical ventilation will be required.

NOTE: If there are five (5) or more employees, separate toilet facilities for each sex may be required by the local building department.

20. DRESSING ROOMS/AREAS

When a food facility has ten (10) or more employees on a single shift , 100 (or more) seats, or if the employees regularly change their clothes in the facility, an adequately sized room shall be provided where employees may change their clothes and store their outer garments and personal belongings.

a. The change room(s) shall be separated from toilets, food storage or food preparation areas and large enough (4-foot x 5-foot minimum with door) to accommodate a standard locker for each employee per shift.

b. The clothing change room shall not be used as an office or for other food facility activities.

c. Telephone jacks, computer jacks, water heaters or other appurtenances will not be accepted in the change room.

NOTE: Check with local Building and Safety departments for American Disability Act requirements.

21. PASS-THROUGH WINDOWS

When food is passed through a window to a customer on the outside of the building, the size of the window opening shall not exceed 432 square inches.

a. Food service pass-through window openings exceeding 216 square inches shall be equipped with an ANSI approved air curtain which will produce an air flow eight inches thick at the discharge opening and with an air velocity of not less than 600 feet per minute (FPM) across the entire opening at a point three feet below the air curtain. (Window openings must be closed when not in use).

b. Air curtains shall turn on automatically when the window is opened.

c. Food service pass-through window openings less than 216 square inches shall be equipped with a self-closing screen, window or solid closing device.

d. The minimum distance between the openings may not be less than 18 inches.

e. The counter surface of service openings shall be smooth and easily cleanable.

22. DELIVERY DOORS

In food facilities that handle unpackaged foods, all dedicated delivery doors leading to the outside shall open outward, be self-closing and be equipped with an air curtain.

a. For delivery doors that are four (4) feet in width or less, the air curtain must produce an airflow not less than eight (8) inches thick at the nozzle and with an air velocity of not less than 750 feet per minute across the entire opening, as measured at a point three (3) feet above the floor.

b. For delivery doors wider than four (4) feet, the air curtain must produce an airflow not less than eight (8) inches thick at the nozzle and with an air velocity of not less than 1600 feet per minute across the entire opening, as measured at a point three (3) feet above the floor.

c. Large cargo-type doors shall not open directly into a food preparation area. Existing cargo-type doors can be framed in and covered to meet acceptable wall standards.

23. ENTRANCE DOORS

All entrances leading to the outside shall be tight fitting, open outward and be self-closing to effectively prevent the entrance of insects and rodents.

24. GARBAGE AND TRASH AREAS

Outdoor storage areas or enclosures used for refuse, recyclables, and returnables shall be constructed of nonabsorbent material such as concrete or asphalt and shall be easily cleanable, durable, and sloped to a drain.

a. Outside trash storage areas should be located as far away from facility entrances as practical to prevent attraction of vermin.

b. Check with your local planning, building and storm water agencies to determine their requirements for sizing, construction and wastewater discharge for outside refuse and grease storage areas

c. Inside trash storage areas shall properly slope (1:50) to a floor drain. Floor, wall, and ceiling finishes for indoor trash area should be consistent with kitchen finishes.

25. LIGHTING

Sufficient natural and/or artificial lighting shall be provided in all areas of a food facility such that employees may perform their particular job functions properly and in a safe manner.

a. At least 50-footcandles of light is required in the following areas:
   - Where employees work with food or utensils
   - Where employee safety is a factor

b. At least 20-footcandles of light must be provided in the following areas:
   - Customer self service areas
   - Server stations
   - Areas of hand washing
   - Areas of warewashing
   - Areas of Equipment and utensil storage
   - Toilet rooms
   - In areas during periods of cleaning

c. At least 10 foot candles of light must be provided in the following areas:
   - Walk-in refrigeration units
   - Dry food storage areas
   - Area of alcoholic beverage preparation or cleaning
   - Inside equipment such as reach-in and under counter refrigerators

d. Light fixtures in areas where food is prepared or where open food is stored or where utensils are cleaned shall be of shatterproof construction or shall be protected with shatterproof shields, and the fixtures shall be readily cleanable.

e. Approved vapor-proof light fixtures shall be installed inside exhaust hoods.

26. VENTILATION

All areas of a food facility shall have sufficient ventilation to facilitate proper food storage and to provide a reasonable condition of comfort for each employee, consistent with the job performed by the employee.

a. Mechanical exhaust ventilation equipment shall be provided over all cooking equipment as required to effectively remove cooking odors, smoke, steam, grease, heat, and vapors. All mechanical exhaust ventilation equipment shall be installed and maintained in accordance with the Uniform Mechanical Code. Also refer to the Uniform Mechanical Code and Ventilation Guidelines at www.ccdeh.com

b. Submit a DEHS Mechanical Exhaust Data Sheet for each exhaust hood.

27. EQUIPMENT AND INSTALLATION

All new and replacement food-related and utensil-related equipment shall be certified or classified for sanitation by an American National Standards Institute (ANSI) accredited certification program (NSF, ITS, ETL, EPH, UL Sanitation or CSA). In the absence of approved applicable sanitation standards, food-related and utensil-related equipment shall be evaluated on a case by case basis by DEHS.

a. All show and display cases, counters, shelves, tables, refrigeration equipment, sinks and other equipment used in connection with the preparation, service and display of food shall be made of nontoxic materials and constructed/installed as to be easily cleanable.

b. All floor mounted equipment shall be placed on minimum six (6) inch high, metal legs or completely sealed in position on a four (4) inch high continuously-coved base or concrete curb, or on approved casters or cantilevered from the wall in an approved manner.

c. Table-mounted equipment that is not easily movable shall be installed to allow cleaning of the equipment and areas underneath and around the equipment by being sealed to the table or elevated on legs that provide at least a four-inch clearance between the table and the equipment.

d. All plumbing, gas lines and conduits, etc., are to be concealed where possible. Otherwise, they must be installed a minimum of six inches off the floor and at least ½ inch away from wall (using proper brackets and spacers) to facilitate cleaning.

e. Exposed plumbing, electrical, and gas lines shall not be installed across any aisle, traffic area or door opening

f. Where plumbing, gas, or electrical lines enter a wall, ceiling or floor, the opening around the line shall be tightly sealed. When foam is used to seal openings, the exposed foam shall be smooth and readily cleanable. Escutcheon plates shall be installed around sprinkler heads nozzles and similar piping protrusions.

g. Multiple runs or clusters of conduit or pipelines shall be furred out and encased in an approved raceway or other sealed enclosure to prevent a vermin harborage.

h. All equipment and backsplashes are to be adequately sealed to the wall. All exposed surfaces of shelving, cabinets, and under counters are to be smooth and sealed.

i. In place manually cleaned equipment (such as band saws and floor mixers) which are not designed to be disassembled and submerged in the facilities warewashing sink (or are too heavy to make such cleaning feasible) require provisions be made for cleaning such items in place (CIP). Provide written procedures for evaluation by DEHS.

28. PLUMBING/WATER HEATER

An adequate, protected, pressurized, potable supply of hot water and cold water shall be provided. The water supply shall be from a water system approved by the health officer or the local enforcement agency.

Provide the make, model and input rating of the water heater on the plans.

a. Hot water shall be supplied at a minimum temperature of at least 120°F measured from the faucet, unless otherwise specified.

b. Handwashing facilities shall be equipped to provide warm water (100 degrees °F) under pressure for a minimum of 15 seconds through a mixing valve or combination faucet.

c. Warewashing facilities shall be equipped to provide warm water (100 degrees °F).

d. In sizing the water heater, the peak hourly demands for all sinks, etc., are added together to determine the minimum required recovery rate.

e. All sinks shall be provided with hot and cold running water from a mixing faucet.

f. Potable water supply to carbonators shall be protected by either an air gap or a vented backflow preventer for carbonated beverage dispensers installed within the carbonated beverage dispenser. The carbonated beverage dispenser shall bear the label of an approved testing agency, certifying and attesting that such equipment has been tested and inspected and meets the requirements of the approved applicable standard. Carbonated beverage dispensers without an approved internal air gap or vented.

29. SEWAGE DISPOSAL/GREASE INTERCEPTORS

All liquid waste, including sewage, generated by a food facility shall be disposed of in an approved manner into either a public sewer system or to an approved on-site sewage disposal system.

NOTE: Check with local agencies (i.e., Building and Safety Department and Local Sewering Agency) for special sewerage and grease interceptor requirements.

a. When a grease interceptor or grease trap is required by the local sewering entity or Building and Safety department, the unit should be installed outside the food facility in the ground. If the unit is allowed inside the food facility, it shall not be located in a food or utensil handling areas.

b. All grease waste must be stored in an approved leak proof container with a tight fitting lid. All grease waste must be removed from the premises and disposed in an approved manner.

APPENDIX 1 – SAMPLE FLOOR PLAN

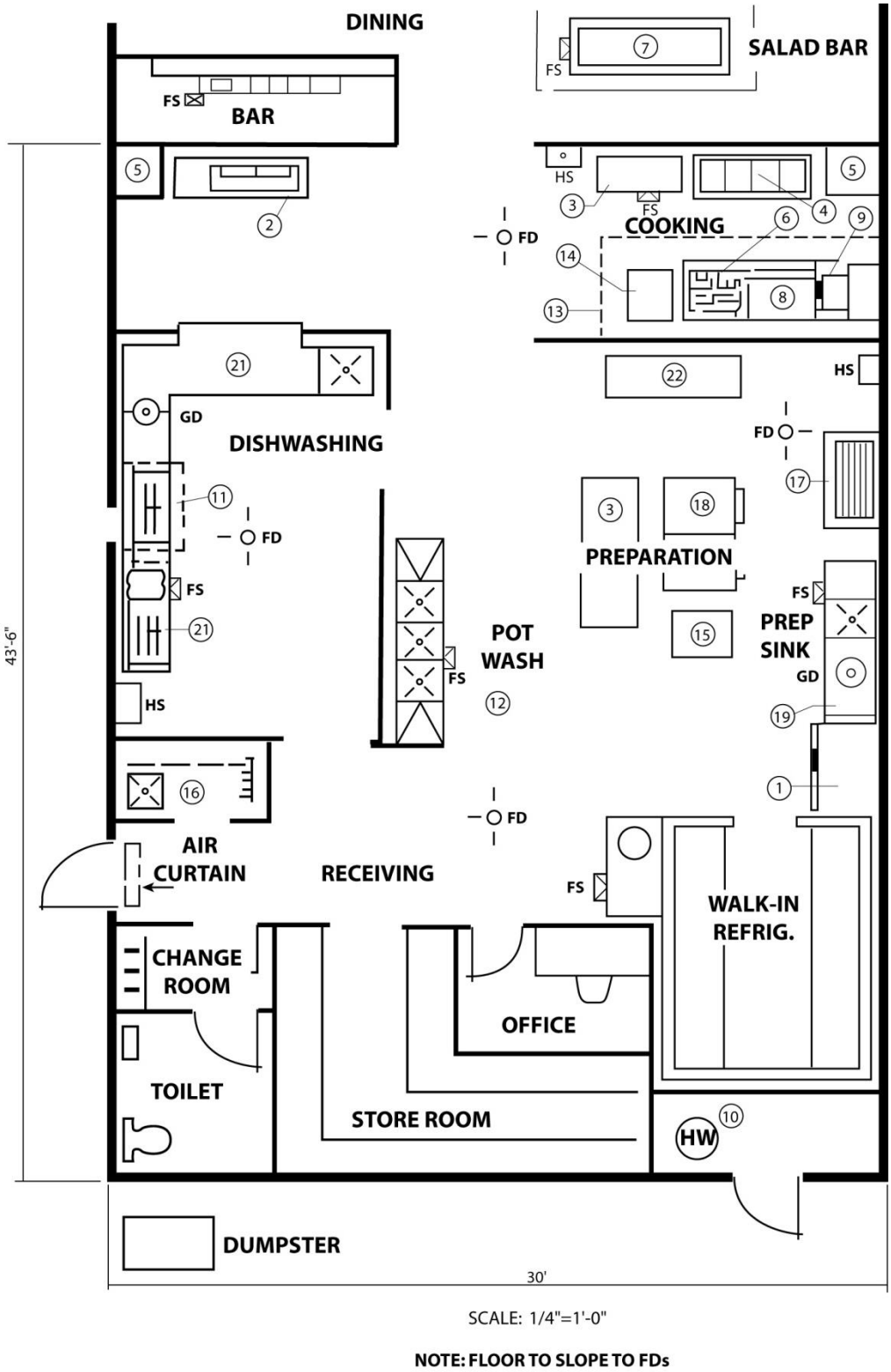

Notes: This is not intended as a model layout but ONLY to illustrate procedure for submitting plans and data. Each piece of equipment is numbered to correspond to the listing in the Equipment Schedule in Appendix 2. Floor Drain: FD; Floor Sinks: FS; Handsinks: HS; hash lines indicate exhaust hoods are over equipment. **Scale has been reduced for illustration only.**

APPENDIX 2

SAMPLE EQUIPMENT SCHEDULE							
EQUIPMENT No.	*EQUIPMENT MAKE AND MODEL	GAS CONNECTION	ELECTRICAL	HOT WATER	COLD WATER	WASTE WATER	COMMENTS
1	Reach-in Refrigerator BEST: Side Model EHS		110V 20A			FS	
2	Food Preparation Table ACME: Model DLM		110V 20A				Self-contained
3	Work Table, Stainless Steel Top – ACME, Custom						Made to dimensions supplies by General Contractor
4	Steam Table Super, MD0315	¾”			½”	FS	Anti-siphon Valve
5	Proofing Cabinet Meier, P-C		110V 20A				
6	Heavy Duty Range ACME, Model I.A.N.	¾"					
7	Salad Bar Custom by General Contractor				½"	FS	Anti-siphon Valve
8	Deep Fat Fryer BEST, Type L	½"					
9	Steam Cooker BEST, SC5				½"	FS	Anti-siphon Valve
10	Hot Water Heater Mills G-BT155	¾"		1"	1"		155,000 BTU
11	Dish machine and Hood Warford., QF-1		220V	1"	1"	FS	High-temperature warewasher hood
12	Utensil Sink ACME, 18" x 18" x 18" F			½"	½"	2"	
13	Hood Custom by General Contractor						See mechanical drawing, detail
14	Bake Oven Meier, O/B	¾"					
15	Bakers Table Custom by CONRAD						
16	Janitor Sink ACME, STD			½"	½"	2"	Floor Mop Sink
17	Ice Machine Frozen CDW56				½"	1"	
18	Freezer Forte: Side Model F		110V				Self-contained

***ABOVE EQUIPMENT LISTINGS ARE FICTITIOUS**

THIS IS A SAMPLE **ONLY**: Specific Brand Names and colors for materials should be specified to insure acceptability.

SAMPLE FINISH SCHEDULE

	FLOOR	FLOOR BASE OR COVE	WALLS	CEILING
FOOD PREPARATION	QUARRY TILE	QUARRY TILE, UP WALL 4 INCHES 3/8" RADIUS COVE	F.R.P.	WASHABLE NON-ABSORBENT LAY-IN CEILING PANELS
DISHWASHING	QUARRY TILE	QUARRY TILE, AS ABOVE	F.R.P.	WASHABLE NON-ABSORBENT LAY-IN CEILING PANELS
STOREROOM	COMMERCIAL GRADE SHEET VINYL	CONTINUOUS WITH FLOOR UP WALL 4 INCHES WITH 3/8" RADIUS COVE	DRYWALL WITH WHITE GLOSS ENAMEL	WASHABLE NON-ABSORBENT LAY-IN CEILING PANELS
WAITRESS SERVICE STATION	QUARRY TILE	QUARRY TILE, AS ABOVE	GREENBOARD, 4 FT. CERAMIC WAINSCOT, LIGHT COLORED	WASHABLE NON-ABSORBENT LAY-IN CEILING PANELS
BAR	QUARRY TILE	QUARRY TILE, AS ABOVE	F.R.P.	WASHABLE NON-ABSORBENT LAY-IN CEILING PANELS
SALAD BAR	QUARRY TILE: EXTENDS 36" BEYOND TABLE ON ALL SIDES	QUARRY TILE, AS ABOVE	N.A.	LAY-IN PANELS
RESTROOMS	CERAMIC TILE	CONTINUOUS WITH FLOOR UP WALL 4 INCHES WITH 3/8" RADIUS COVE	GREENBOARD, 4 FT. CERAMIC WAINSCOT	WATER-RESISTANT DRYWALL, WHITE ENAMEL
CLEANING EQUIPMENT/ MOP EQUIPMENT	QUARRY TILE	CONTINUOUS WITH FLOOR UP WALL 4 INCHES WITH 3/8" RADIUS COVE	F.R.P.	WASHABLE NON-ABSORBENT CEILING PANELS
DRESSING ROOM(S)	CERAMIC TILE	CONTINUOUS WITH FLOOR UP WALL 4 INCHES WITH 3/8" RADIUS COVE	DRYWALL WITH WHITE ENAMEL	LIGHT-COLORED ENAMEL PAINTED DRYWALL
WALK-IN REFRIGERATOR	**SEALED SMOOTH CONCRETE	PREFABRICATED STAINLESS STEEL WALL UP WALL 4 INCHES, 3/8" RADIUS SANITARY COVE	PREFABRICATED STAINLESS STEEL	PREFABRICATED STAINLESS STEEL

*SALAD BAR IS COVERED ON TOP AND SIDES BY AN APPROVED SNEEZE GUARD: SEE DETAIL SHEET A-4.
**SMOOTH CONCRETE IS SEALED TO BE GREASE RESISTANT WITH AN APPROVED SEALER.

APPENDIX 4 – COMPUTING HOT WATER DEMANDS FOR FOOD FACILITIES

Visit www.ccdeh.com for water heater sizing guidelines.

A. Hot and cold water under pressure shall be provided through a mixing valve to each sink compartment.

1. Fixture	# of Compartments	Gallons per Hour
Pot Sinks 18"x18"	1	14
Pot Sinks 18"x18"	2	28
Pot Sinks 18"x18"	3	42
2. Vegetable sinks (food prep)		5
3. Mop sinks		15
4. Lavatories (hand sinks)		5

If any other plumbing fixtures will be installed such as bar sinks, dishwashing machines, pre-wash (dishwashing), etc., please consult the Plan Check Specialist for assistance.

Example:

Plumbing	GPH (peak demand)
3 Compartment Sink	42
Mop Sink	15
Food Prep Sink	5
3 Hand Sinks	15
	77

Factors of Formula

Weight (Wt.) of water per gal = 8.33
Temperature rise (average) i.e. 120°F - 70°F = 50°F
Thermal efficiency of natural gas = 0.75
Thermal efficiency of electricity = 0.98 (round off to 1.0 for ease of calculation)
1 Kw = 3,412 BTU's (round off to 3,400 BTU)

1. GAS HOT WATER SYSTEMS

Formula for minimum requirement

$$\frac{\text{GPH x wt. per gal x temp. rise}}{\text{Thermal efficiency of equipment}} = \text{BTUs}$$

$$\frac{77 \text{ GPH x } 8.33 \text{ x } 50°\text{F}}{0.75} = 42{,}761 \text{ BTUs}$$

2. ELECTRIC HOT WATER HEATER SYSTEMS

Formula for minimum requirement

$$\frac{\text{GPH x wt. per gal x temp rise}}{\text{Thermal efficiency}} \text{ x Kw conversion} = \text{Kw}$$

$$\frac{77 \text{ x } 8.33 \text{ x } 50°\text{F}}{1} \text{ x } \frac{1 \text{ BTU}}{3400 \text{ Kw}} = 9.4 \text{ Kw}$$

APPENDIX 5 - MOBILE FOOD FACILITY COMMISSARY REQUIREMENTS

In addition to meeting the requirements of a food facility specific requirements may apply depending on the scope and type of mobile food facilities being serviced. Below may be some of the specific requirements for a mobile food commissary:

a. Wash down station
   - Hot and cold water under pressure shall be provided for cleaning the mobile food facility and mobile support unit. Wash down water lines shall be equipped with an approved backflow prevention device.
   - Adequate wash down pad area (for the dumping of waste water and cleaning of the trucks) made of cement/durable material which can withstand constant water and cleaning , sloped to ensure it drains properly to approved sewage disposal system.
   - Commissaries for MFF approved for prepackaged foods only, shall provide one wash down space for every twenty MFF stored at the commissary.

b. An approved potable water source shall be provided for filling water tanks separate from cleaning/servicing.
   - If potable water hoses are provided at every truck parking space, proper quick disconnect connections shall be provided.

c. An electrical hook shall be provided for each parking space.

d. Adequate facilities shall be provided for the handling and disposal of garbage and refuse originating from a mobile food facility and/or mobile support unit.

e. Grease containers shall be provided for appropriate disposal of grease, like barrels or a special grease container that can be pumped by an approved company.

f. Additional 3 compartment sinks, hand sinks, preps sinks, etc. may be required depending on the scope and type of mobiles food facilities being serviced.

g. Adequate refrigeration and dry storage.

h. Ice machines other food equipment must be inside the approved food facility.